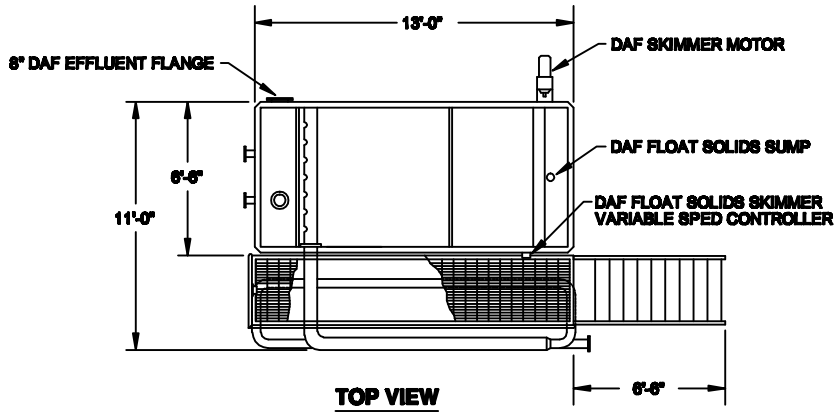

TOP VIEW

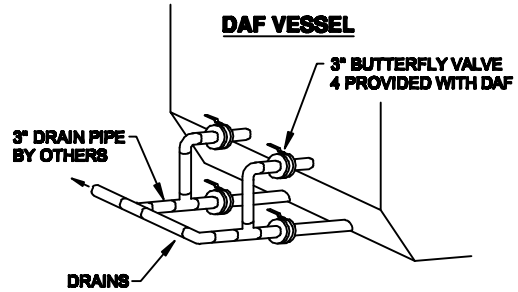

DRAIN PIPE DETAIL

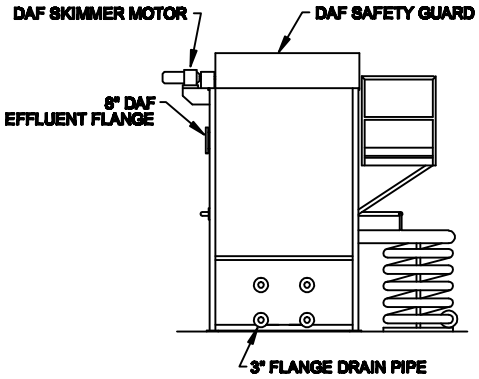

LEFT END VIEW

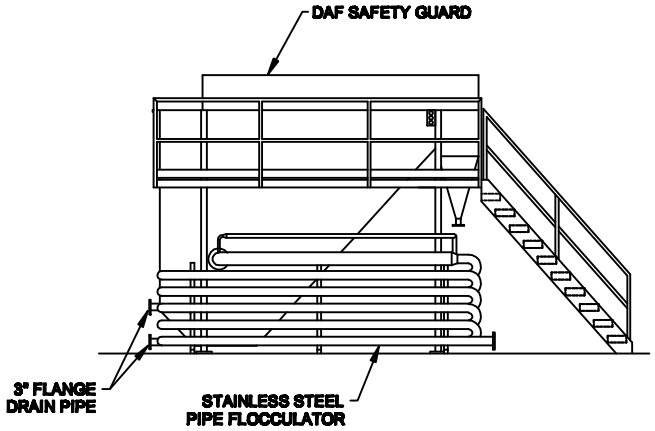

FRONT VIEW

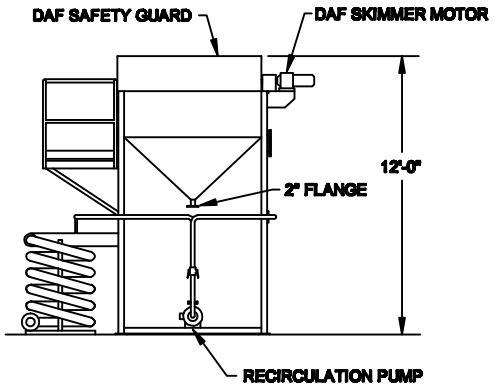

RIGHT END VIEW

STAIRS ARE NOT SHOWN FOR CLARITY

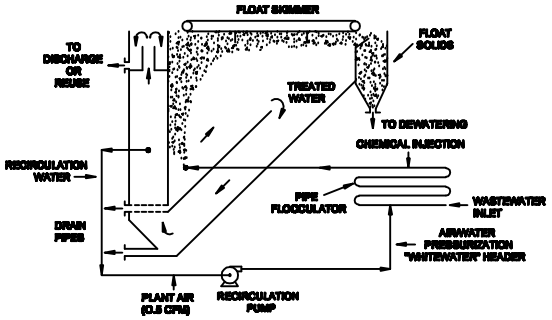

SYSTEM DIAGRAM

(NOT TO SCALE)

200 GPM
DISSOLVED AIR FLOTATION
WHITEWATER SYSTEM ®